Code ES60GFDBL

60cm Gas on Ceramic Cooktop

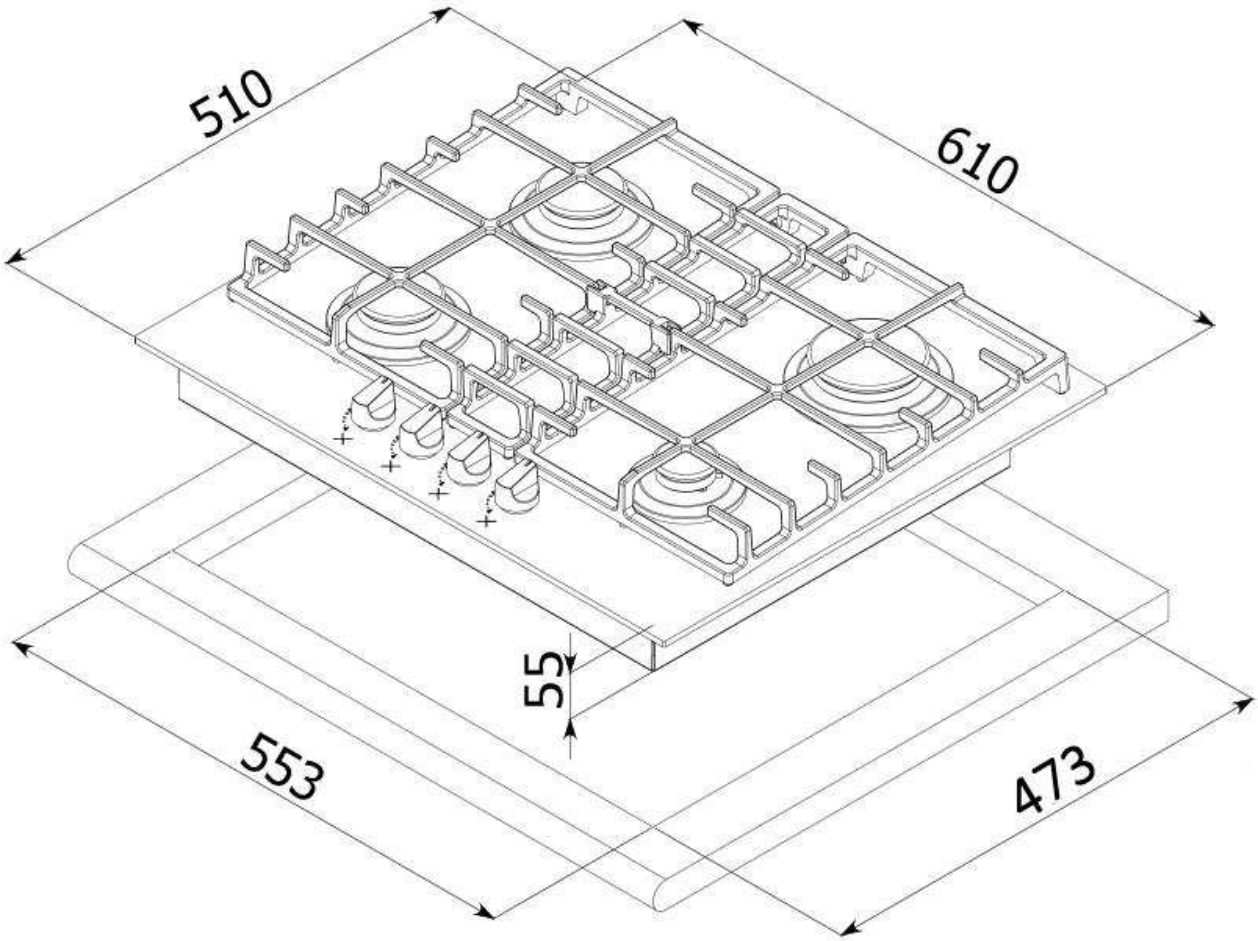

+ **Technical Specifications** All specifications and product sizes may be varied by the manufacturer without notice. Euro Appliances are not responsible for any errors or omissions. Pictures, specifications and dimensions are for illustration purposes only and cut outs for appliances should only be physical product measurements. All dimensions and information are for indicative use only. Please refer to all technical specifications in product booklet supplied with appliance, prior to installation.

Contact the Customer Care Centre for product support on toll free 1800 440 335

Dimension

bringing european quality to your home

Disclaimer: Please note that measurements and model appearances may change at any time. Euro Appliances reserve the right to change specifications without notice.